# Operating instructions
# Pallas Duo

## Index

# 1 General

We thank you for having chosen the Pallas Duo, we hope that this product will give you complete satisfaction. The greatest care was taken with its manufacture.

The Pallas Duo is delivered in a cardboard box together with a by-pass (optional). Please check the softener carefully, in the presence of the deliveryman, to ensure you that it was not damaged during transport.

The instructions described in this handbook must be respected to the letter. Before starting to use the softener, read entirely and carefully this handbook.  Handle your softener with care.

The Packaging can be fully recycled, please dispose of it in a suitable place.

Here is some information which will enable you to use the softener, as well as its possible capabilities.

# 2 Presentation

View of the Softener

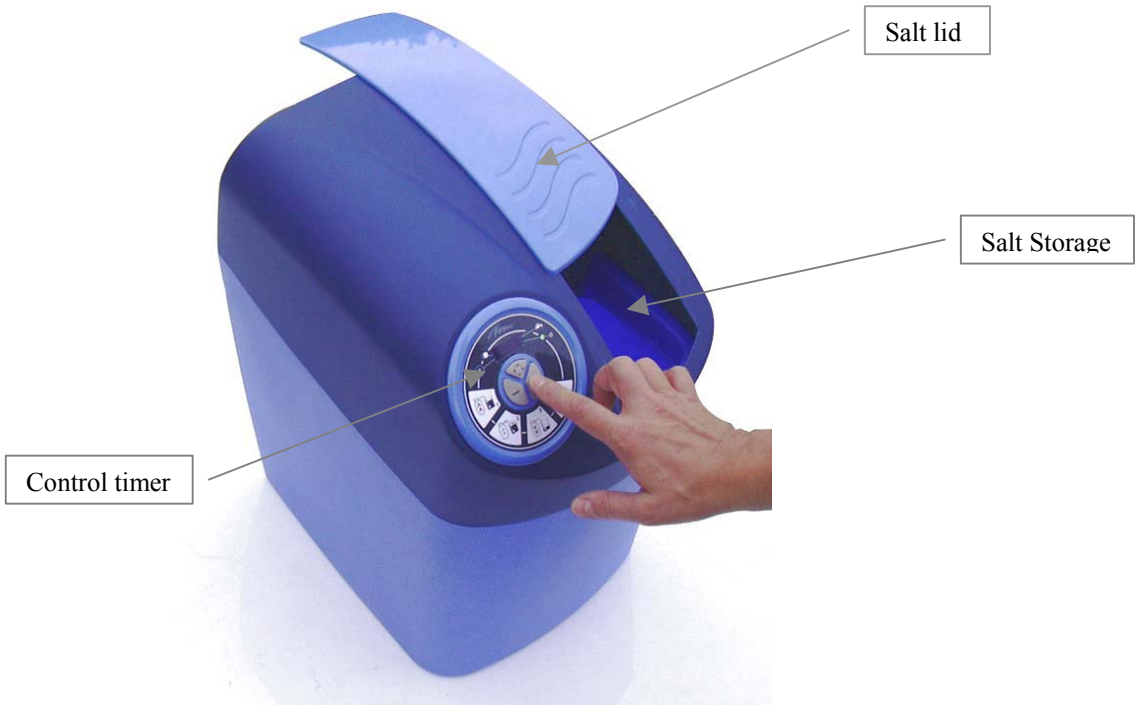


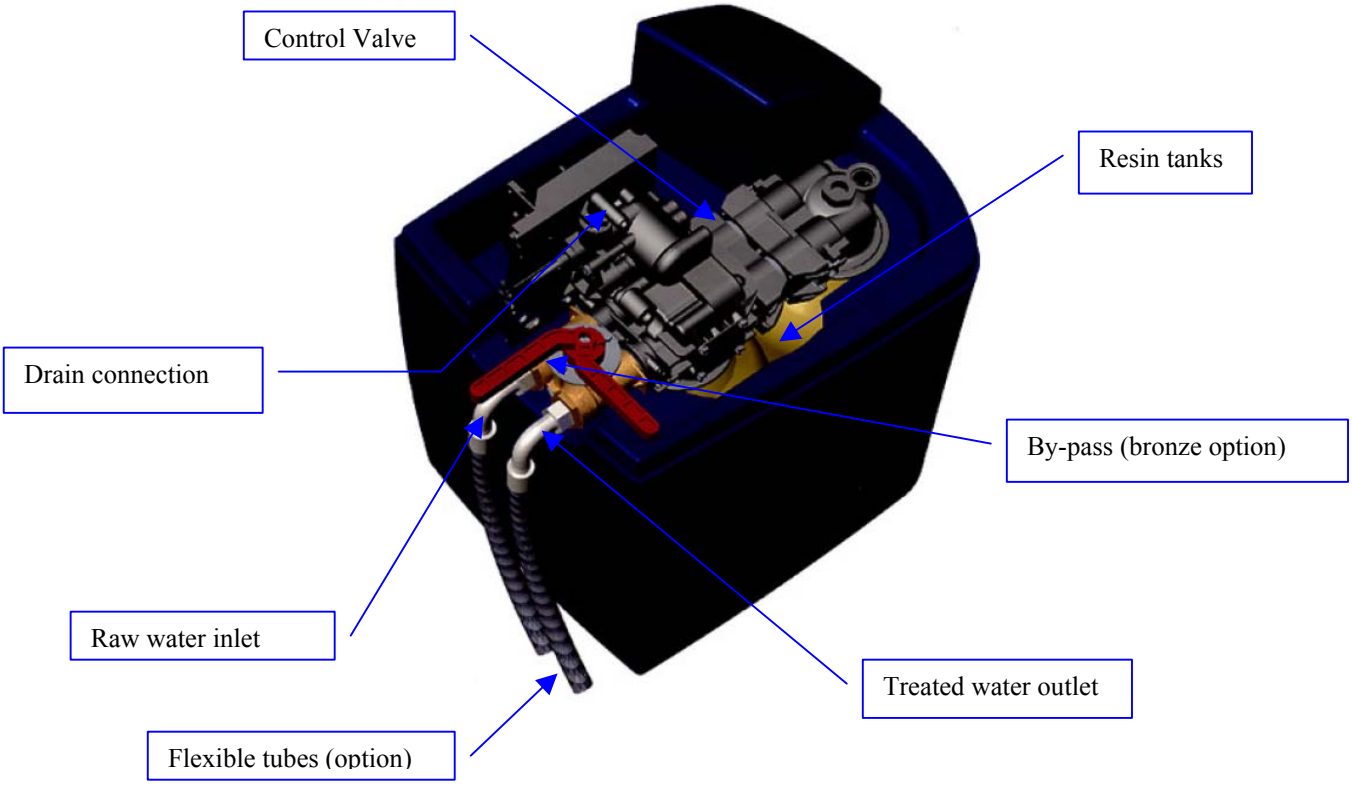

# 2 Presentation

The valve alternates automatically between the service and regeneration cycles.

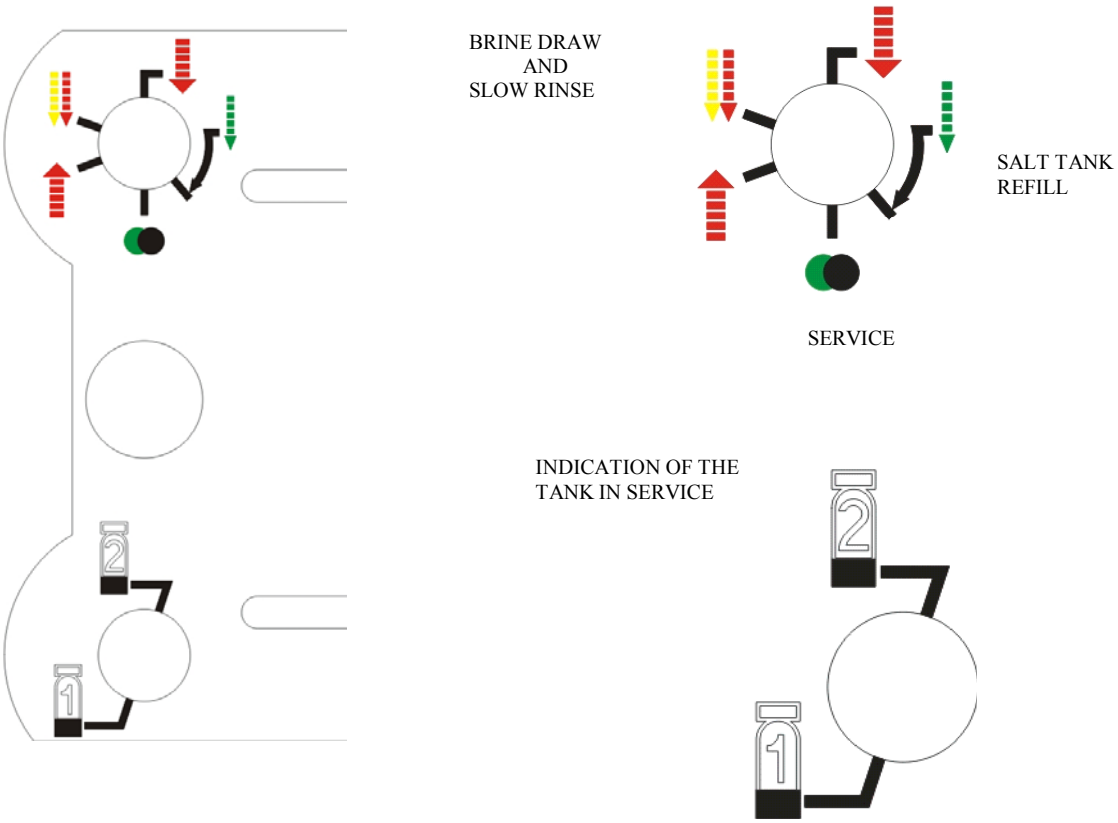


With the valve in service, it is possible to change the time of day, the valve program or initiate a regeneration.

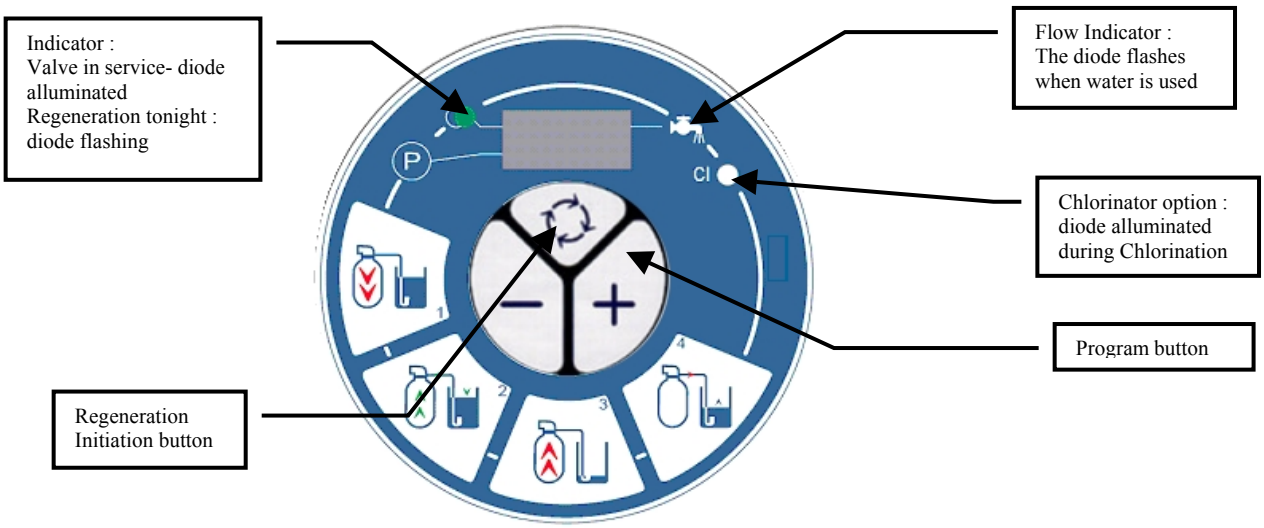

# 3 General installation notes

## 1 Pressure

A minimum pressure of 1,8 bar (30psi) is necessary in order that the valve regenerates correctly. Do not exceed 8.0 bar (120 psi). If the case arises a pressure regulator must be installed before the installation

## 2 Electrical connection

Make sure that the power supply cannot be cut by a switch upstream of the installation. If the electric cable is damaged, it must be replaced by a qualified person.

## 3 Existing plumbing

It must be in good condition and not furred up. In case of doubt, it is preferable to replace it. The installation of a prefilter is always advised.

## 4 Water Temperature

The temperature of water should not exceed 35 °C and the installation should not be subjected to freezing conditions (risk of very serious damage).

# 4 Installation notes

When you choose the site for your Pallas Duo, please take into account the following points and procedures:

1) To install your Pallas Duo in the chosen place, ensure that the floor is clean, flat and stable (If necessary, put a board under the softener to ensure a level area ). There must always be a drain tundish adjacent to where the softener is to be installed to allow the regeneration water to run-off.  A power socket protected by a RSB and suitably earth bonded must be sited adjacent to the softener.

2) In cold weather, it is recommended that the Pallas Duo is bought up to ambient temperature before proceeding with the installation. The Pallas Duo must posititioned so that it is protected from freezing. Do not install the unit where it is exposed to direct sunlight or high temperatures (45 °C max).

3) Plumbing must be installed according to the local bylaws and regulations in force. The size of the drain tube must be at least 13 mm (1/2").

4) The soldered joints on the principal plumbing and the connection to the drain pipe must be carried out before the Pallas Duo is connected to prevent any damage to the softener. For all interventions, isolate the water supply at the stop cock and disconnect the electrical supply.

5) Fill the salt reservoir with 50mm (2") water. Do not add salt for the moment.

6) Put the by-pass valve of your Pallas Duo in the "by-pass" position. Open the raw water feed tap and a cold water tap in the vicinity run for a few minutes until all of the pipes are rinsed of any residual foreign bodies (solder remains). Turn off the raw water feed tap and cold tap when water runs clear.

7) Put the by-pass valve in the "service" position and let the water run into the resin tanks. When the water flow stops, open a cold water tap and let run in order to purge the air remaining in the resin tank. Repeat for the second resin tank.

8) Connect the softener electrically. Once powered, the valve may cycles itself and turn over the position service.

9) The valve includes an indicator to inform the fitter of its position: the wheel directly below the motor indicates the bottle that is currently in the service position. The Digital display on the front of the softener alternates between the volume remaining in the tank in service, the number of the tank in service (U-1 or 2 corresponds with the wheel: "INDICATION OF the TANK IN SERVICE") and the time of the day.
Important: to understand various dislays, please see the following chapter: Programming.

10) Initiate a regeneration and bring the valve to cycle 1, by pressing the regeneration button. The valve begins by transfering from one tank to the other and then entering the regeneration cycle of the tank that was in service. The water runs until the system is purged of the air. Once the air is completely evacuated, it enters the Brine draw & slow rinse stage and then into brine refil. On return to the service position repeat the precedure. This allows the complete purge of the second bottle
.

**11) The installation must be carried out under hygienic conditions.  It is recomended that annual maintenance is undertaken by qualified personnel.**

# 5 Programming

## 1. Programming the time of day

Press the **-** or **+** keys to adjust the time of day per minute. Prolonged holding of either the **-** or **+** keys will accelerate the changes.

## 2. Programming the valve

### 2.1. Enter the programming mode

Press and hold both of the - and + keys for 5 seconds to enter the programming mode.

### 2.2. Change of program and modifications

Press the key to pass from one stage to the next until leaving the program and returning in service. To use the- or + keys to modify the programmed values.

The programmed values.

Note: it is necessary to pass through all of the programming stages and to return to service position so that any modifications to the program are saved.


The first stage of the programming mode corresponds to the system capacity. The capacity is expressed in US gallons, litres or in $m^3$ (format US/metric or $m^3$). For example : 6500 litres


The second stage allows the adjustment of the time of regeneration. For example : 2 Oclock in the morning.


The third stage is a calander day overide. (maximum number of days between 2 regenerations). For example : a regeneration at least every 7 days.

Press the key to return to the service position. The programming is finished.

## 3. Initiate a manual regeneration

In the event of prolonged absence, and of non use of your Pallas Duo, it is necessary to initiate a manual regeneration.

There are two ways to initiate a manual regeneration:

1. To press the key: if an immediate regeneration is programmed, the valve will instantly start the regeneration

2. To press and hold the key for 5 seconds: - in both cases, a regeneration will start instantantly

# 6 Description of function

## Regeneration volumetric immediate

Under normal operation, the display alternates between the time of day,the volume remaining and the tank in service. (U1 or U2). The volume display is in litres. Progressively with the use, the volume remaining display decreases from the maximum value down zero or (- - - -). When this occurs, a regeneration is started immediately. A water flow is indicated by the flow diode that flashes at a varying speed according to the water flow. For example:


Volume remaining 530 litres


Volume remaining 0 litre

* For capacity figures please refer to Apendix A

## Immediate volumetric regeneration with a calendar overide

When the set number of days between each regeneration is reached, a regeneration is started immediately. Regeneration occurs whether or not the volume remaining has reached zero.

## Control during a regeneration

During regeneration, the valve will display the number of the regeneration cycle stage to be reached (display flickering) or reached and remaining time for this cycle (fixed display). Once all of the regeneration cycles are carried out, the valve returns to the service position. For example:


The regeneration is in stage 2 with twenty-seven minutes remaining.

To step from one cycle stage to the next during regeneration, press the key. This will have no effect if the valve is already moving between two cycles.

## Operation in programming mode

One can enter the programming mode only if the valve is in service. During the programming mode, the valve still operates normally and records all information. The valve program is stored in a non volatile memory.

## Operation during a power interruption.

During a power outage, all the data is saved to be restored once the power is returned. The programmed data can be stored for years without loss. The Electronics will be inoperative during power outage and any programmed regeneration will be delayed. The Electronics restores all information from the moment to which the power stopped. An incorrect time will indicate that there was a power interuption.

# 7 Wiring Diagram

## *Up Flow*

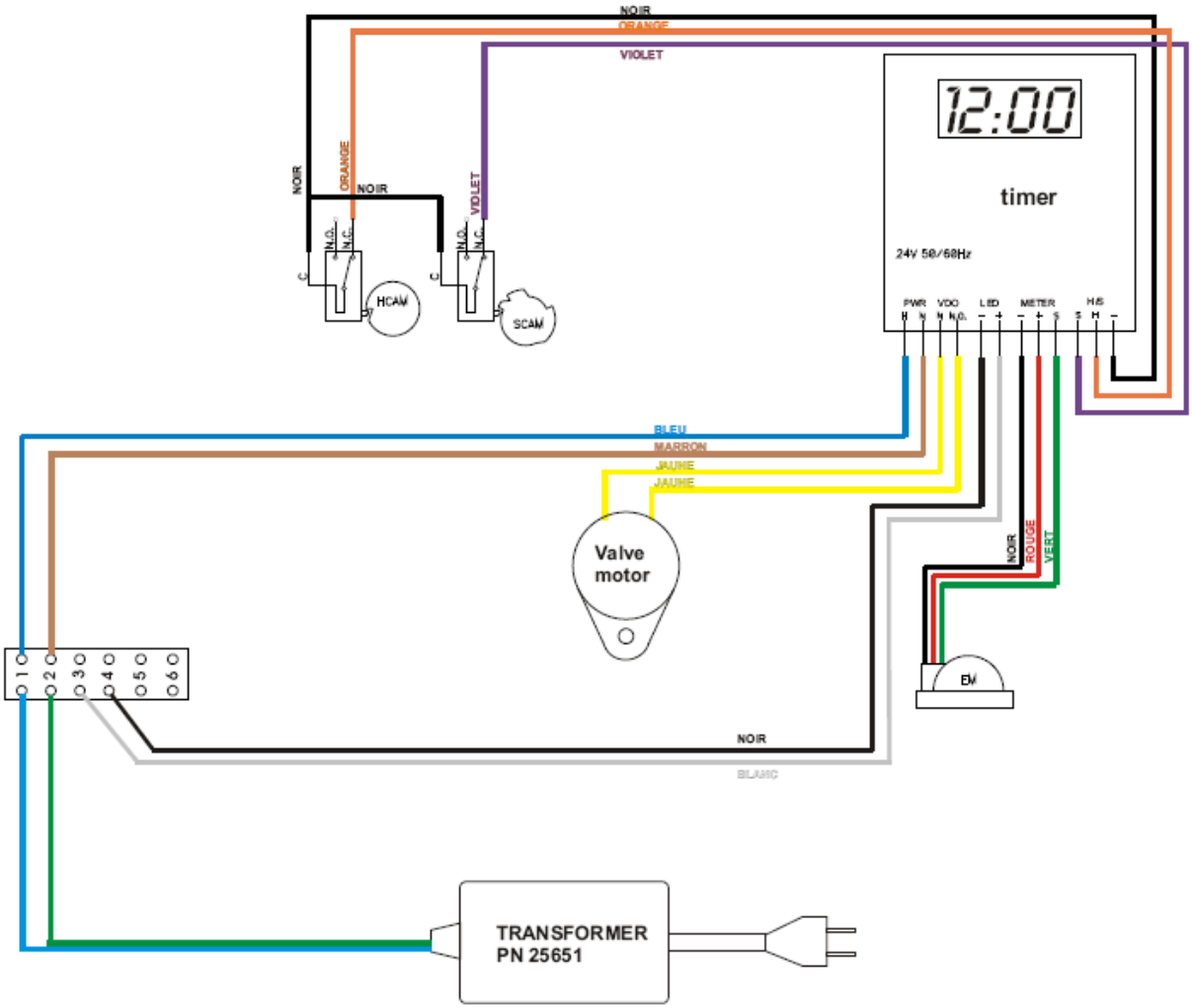

# 7 Wiring Diagram

## *Up Flow + Chlorinator*

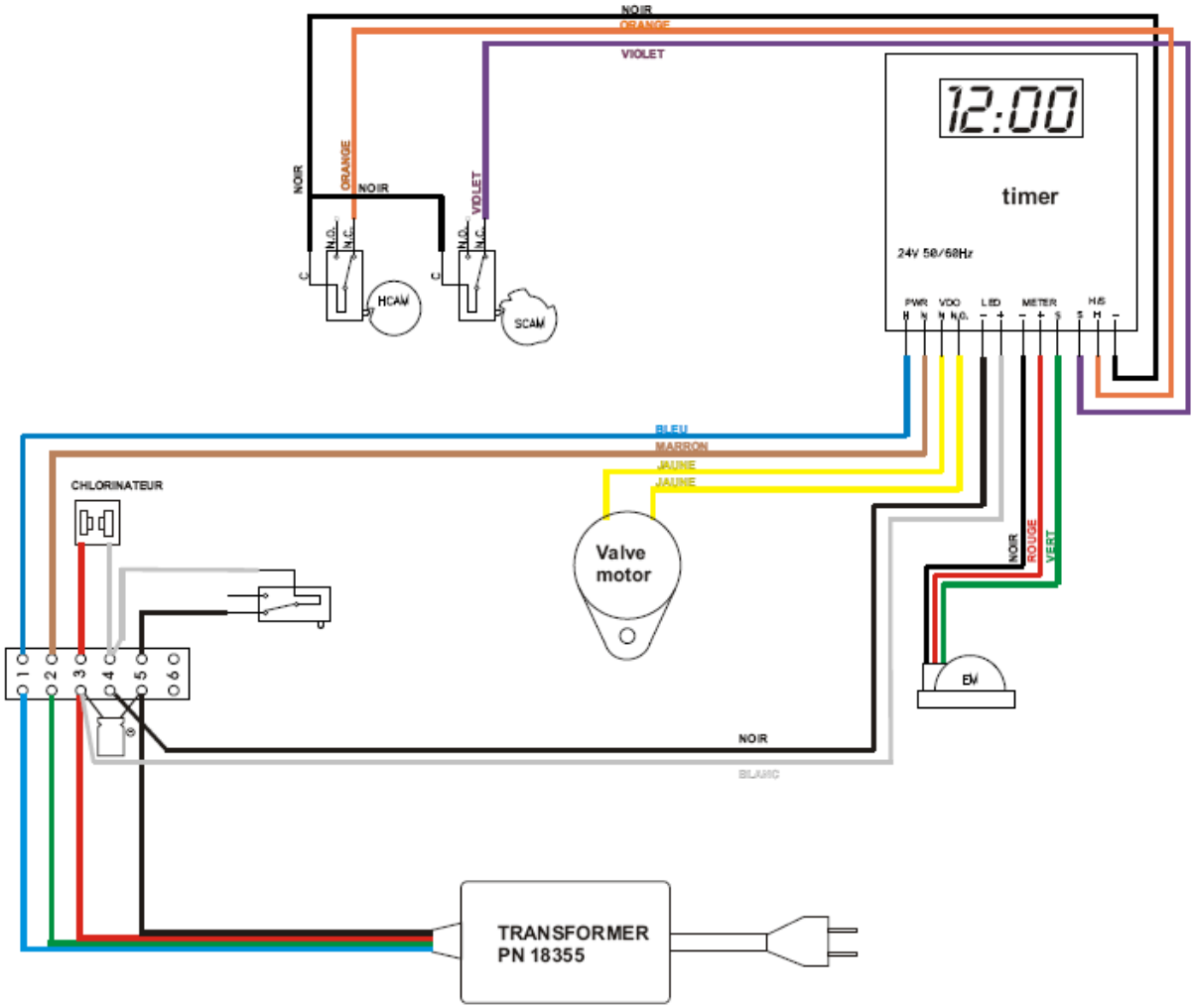

# 8 Exploded Diagram

## *Power Head - Up Flow (Ref : 28396)*

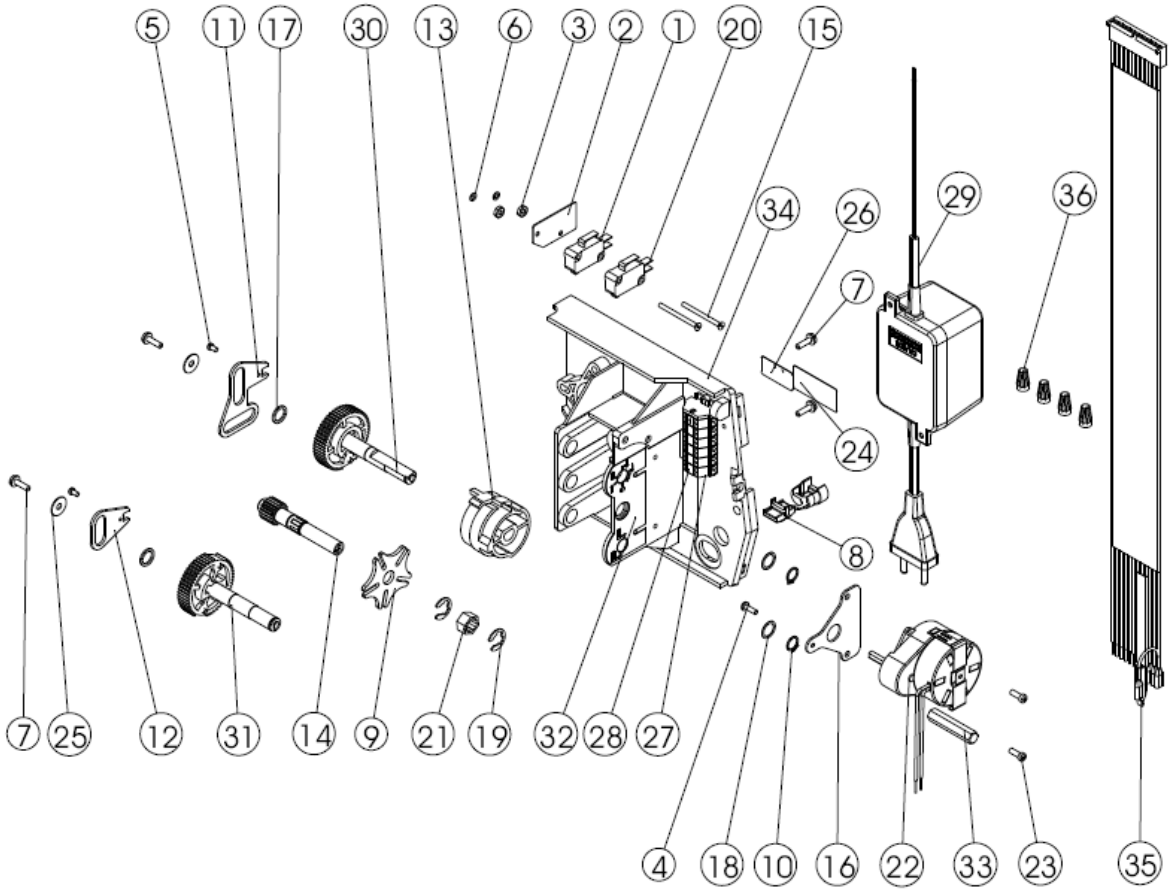

# 8 Exploded Diagram

## *Power Head - Up Flow (Ref : 28396)*

| ITEM | QTY | PART No | DESCRIPTION |
|---|---|---|---|
| 1 | 1 | 10218 | MICROSWITCH |
| 2 | 1 | 10302 | INSULATOR |
| 3 | 2 | 10339 | NUT |
| 4 | 1 | 11086 | SCREW M3 X 0.50 |
| 5 | 2 | 11335 | SCREW FILLISTER HEAD # 4-40 x 0.19 |
| 6 | 2 | 11663 | LOCK WASHER |
| 7 | 4 | 13296 | SCREW # 6-20 x 0.50 |
| 8 | 1 | 13547 | STRAIN RELIEF |
| 9 | 1 | 14896 | GENEVA WHEEL |
| 10 | 2 | 14917 | RETAINING CLIP |
| 11 | 1 | 14921 | PISTON ROD LINK UPPER |
| 12 | 1 | 15019 | PISTON ROD LINK LOWER |
| 13 | 1 | 15132 | TRIPLE CAM |
| 14 | 1 | 15135 | DRIVE GEAR 9000 |
| 15 | 2 | 15172 | SCREW FLAT HEAD # 4-40 x 1.38 |
| 16 | 1 | 15199 | GROUND PLATE 9000/9500 |
| 17 | 2 | 15372 | THRUST WASHER |
| 18 | 2 | 15692 | SPACER |
| 19 | 2 | 15810 | RETAINING CLIP |
| 20 | 1 | 16433 | MICROSWITCH |
| 21 | 1 | 17315 | DRIVE NUT 9000/9500 |
| 22 | 1 | 18737 | MOTOR 24V50HZ - 1RPM |
| 23 | 2 | 19160 | SCREW |
| 24 | 1 | 21271 | SERIAL NUMBER LABEL |
| 25 | 2 | 23250 | WASHER SS LN .4 |
| 26 | 1 | 23474 | LABEL ASSY BY |
| 27 | 1 | 23653-06 | TERMINAL BLOCK 06 POSITIONS |
| 28 | 1 | 24934 | TERMINAL BLOCK LABEL |
| 29 | 1 | 25651 | TRANSFORMER |
| 30 | 1 | 25868 | DRIVE GEAR UPPER ASSEMBLY |
| 31 | 1 | 25870 | DRIVE GEAR LOWER ASSEMBLY |
| 32 | 1 | 27002 | LABEL SHAFT POSITION |
| 33 | 1 | 27712 | MOTOR PROTECTOR |
| 34 | 1 | 28207 | BACK PLATE 9120 |
| 35 | 1 | 28330 | HARNESS 9120 |
| 36 | 1 | 40422 | WIRE NUT |

# 8 Exploded Diagram

## *Power Head - Up Flow + chlorinator (ref : 28363)*

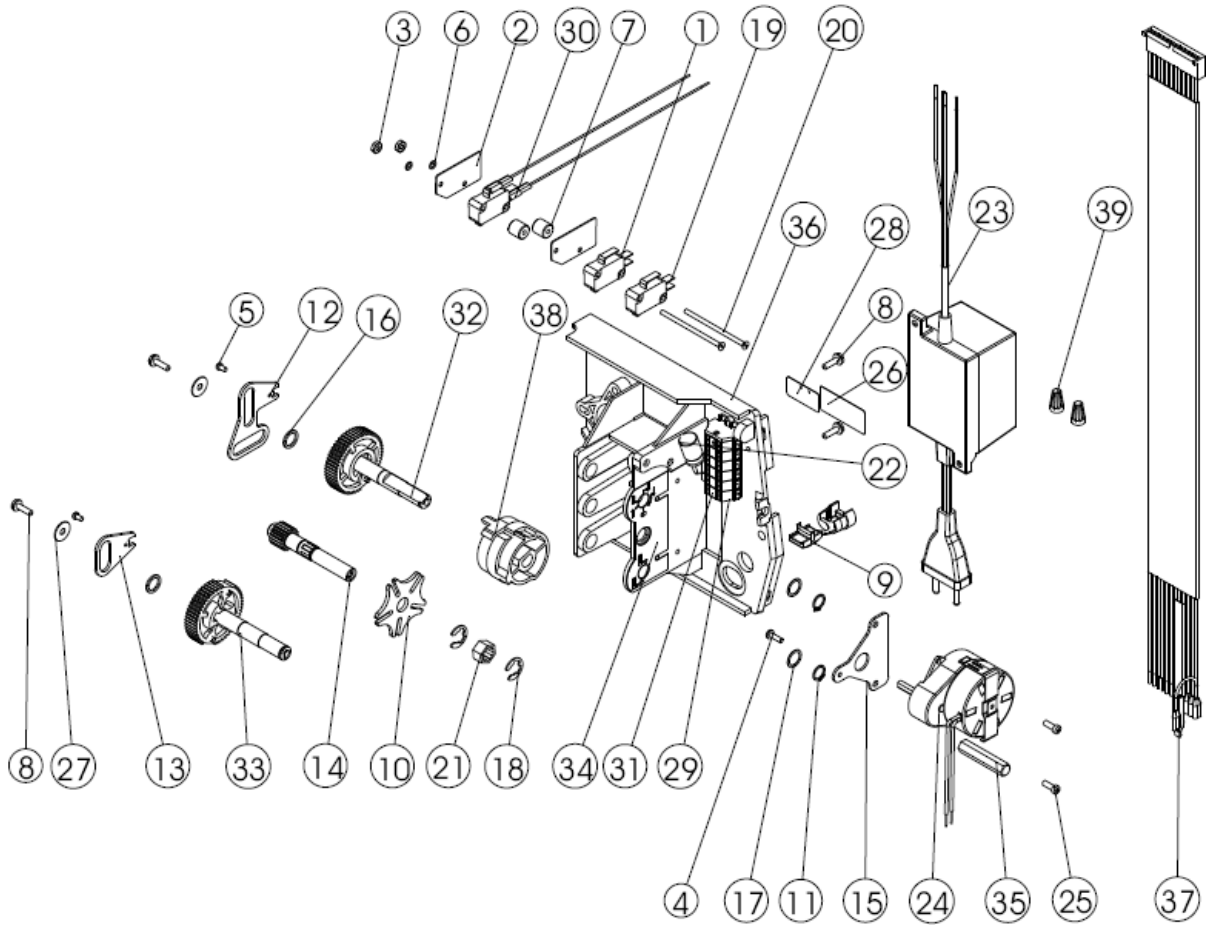

# 8 Exploded Diagram

## *Power Head - Up Flow + chlorinator (ref : 28363)*

| ITEM | QTY | PART No | DESCRIPTION |
|---|---|---|---|
| 1 | 1 | 10218 | MICROSWITCH |
| 2 | 1 | 10302 | INSULATOR |
| 3 | 2 | 10339 | NUT |
| 4 | 1 | 11086 | SCREW M3 X 0.50 |
| 5 | 2 | 11335 | SCREW FILLISTER HEAD # 4-40 x 0.19 |
| 6 | 2 | 11663 | LOCK WASHER |
| 7 | 2 | 11882 | SWITCH STAND OFF |
| 8 | 4 | 13296 | SCREW # 6-20 x 0.50 |
| 9 | 1 | 13547 | STRAIN RELIEF |
| 10 | 1 | 14896 | GENEVA WHEEL |
| 11 | 2 | 14917 | RETAINING CLIP |
| 12 | 1 | 14921 | PISTON ROD LINK UPPER |
| 13 | 1 | 15019 | PISTON ROD LINK LOWER |
| 14 | 1 | 15135 | DRIVE GEAR 9000 |
| 15 | 1 | 15199 | GROUND PLATE 9000/9500 |
| 16 | 2 | 15372 | THRUST WASHER |
| 17 | 2 | 15692 | SPACER |
| 18 | 2 | 15810 | RETAINING CLIP |
| 19 | 1 | 16433 | MICROSWITCH |
| 20 | 1 | 16442 | SCREW AUX SWITCH |
| 21 | 1 | 17315 | DRIVE NUT 9000/9500 |
| 22 | 1 | 17592 | CAPACITOR |
| 23 | 2 | 25651 | TRANSFORMER |
| 24 | 1 | 18737 | MOTOR 24V50HZ - 1RPM |
| 25 | 2 | 19160 | SCREW |
| 26 | 1 | 21271 | SERIAL NUMBER LABEL |
| 27 | 1 | 23250 | WASHER SS LN .4 |
| 28 | 1 | 23474 | LABEL ASSY BY |
| 29 | 1 | 23653-06 | TERMINAL BLOCK 06 POSITIONS |
| 30 | 1 | 23950-10 | CHLORINATOR MICROSWITCH ASSY |
| 31 | 1 | 24934 | TERMINAL BLOCK LABEL |
| 32 | 1 | 25868 | DRIVE GEAR UPPER ASSEMBLY |
| 33 | 1 | 25870 | DRIVE GEAR LOWER ASSEMBLY |
| 34 | 1 | 27002 | LABEL SHAFT POSITION |
| 35 | 1 | 27712 | MOTOR PROTECTOR |
| 36 | 1 | 28207 | BACK PLATE 9120 |
| 37 | 1 | 28330 | HARNESS 9120 |
| 38 | 1 | 28395 | TRIPLE CAM ASSY |
| 39 | 1 | 40422 | WIRE NUT |

# 8 Exploded Diagram

## *Valve Body Assembly (Ref : 28238)*

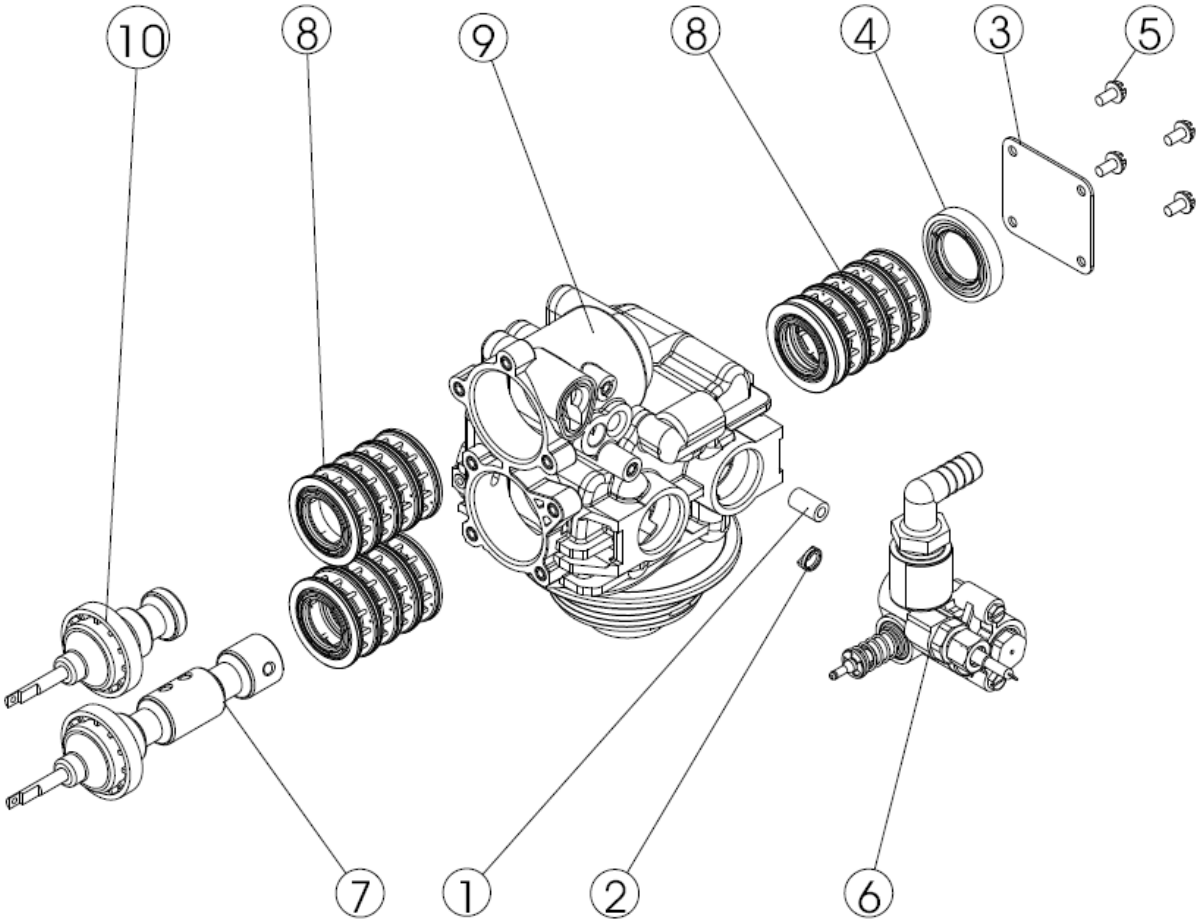


| ITEM | QTY | PART No | DESCRIPTION |
|---|---|---|---|
| 1 | 1 | 13361 | SPACER INJECTOR |
| 2 | 1 | 13497 | AIR DISPERSER |
| 3 | 1 | 14906 | END PLATE |
| 4 | 1 | 14928 | END PLUG STUD |
| 5 | 4 | 15137 | SCREW HEX WASHER HEAD 10-24 X 3/8" |
| 6 | 1 | 28246 | INJECTOR ASSEMBLY 9100 UF |
| 7 | 1 | 28173 | PISTON LOWER ASSEMBLY 9000 UF |
| 8 | 1 | 25642 | SEAL & SPACER KIT 9000/91000 |
| 9 | 1 | 28241 | VALVE BODY & DISTRIBUTOR ADAPTOR 9100 |
| 10 | 1 | 24234 | PISTON UPPER ASSEMBLY 9100 UF |

# 8 Exploded Diagram

## *Second tank adaptor assembly*

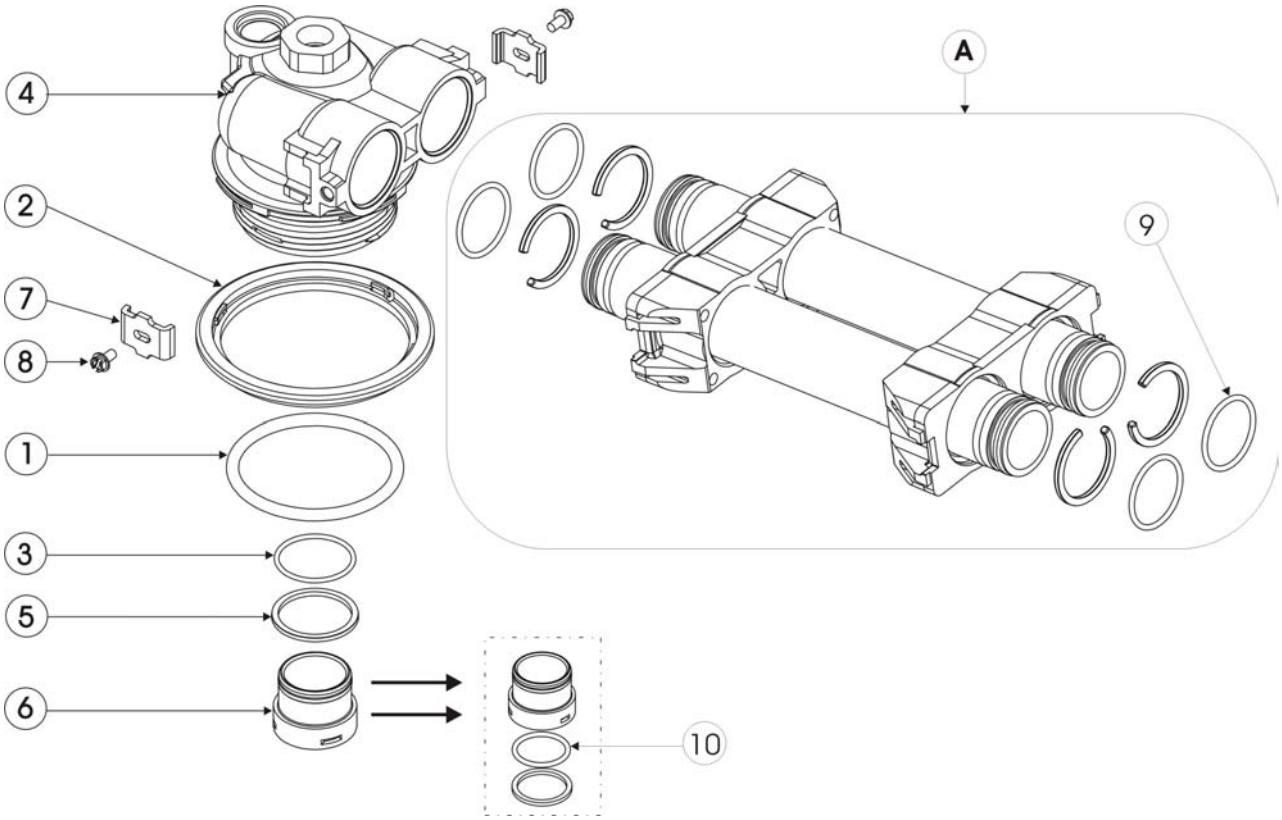


| ITEM | QTY | P/N | DESCRIPTION |
|---|---|---|---|
| 1 | 1 | 18303-01 | O'ring |
| 2 | 1 | 18569 | Retainer tank seal |
| 3 | 1 | 19054 | O'ring |
| 4 | 1 | 40673 | 2nd tank adapter |
| 5 | 1 | 40538 | O'ring retainer 32mm |
| 6 | 1 | 61419 | Distributor adapter kit |
| 10 | 1 | 13304-01 | O'ring |
| 7 | 2 | 13255 | Clip |
| 8 | 2 | 14202-01 | Screw |
| A | 1 | 28243-07 | Tube assembly 9100 for 7" tank |
| 9 | 4 | 13287-01 | O'ring |

# 8 Exploded diagram

## *Water meter ¾ assembly*

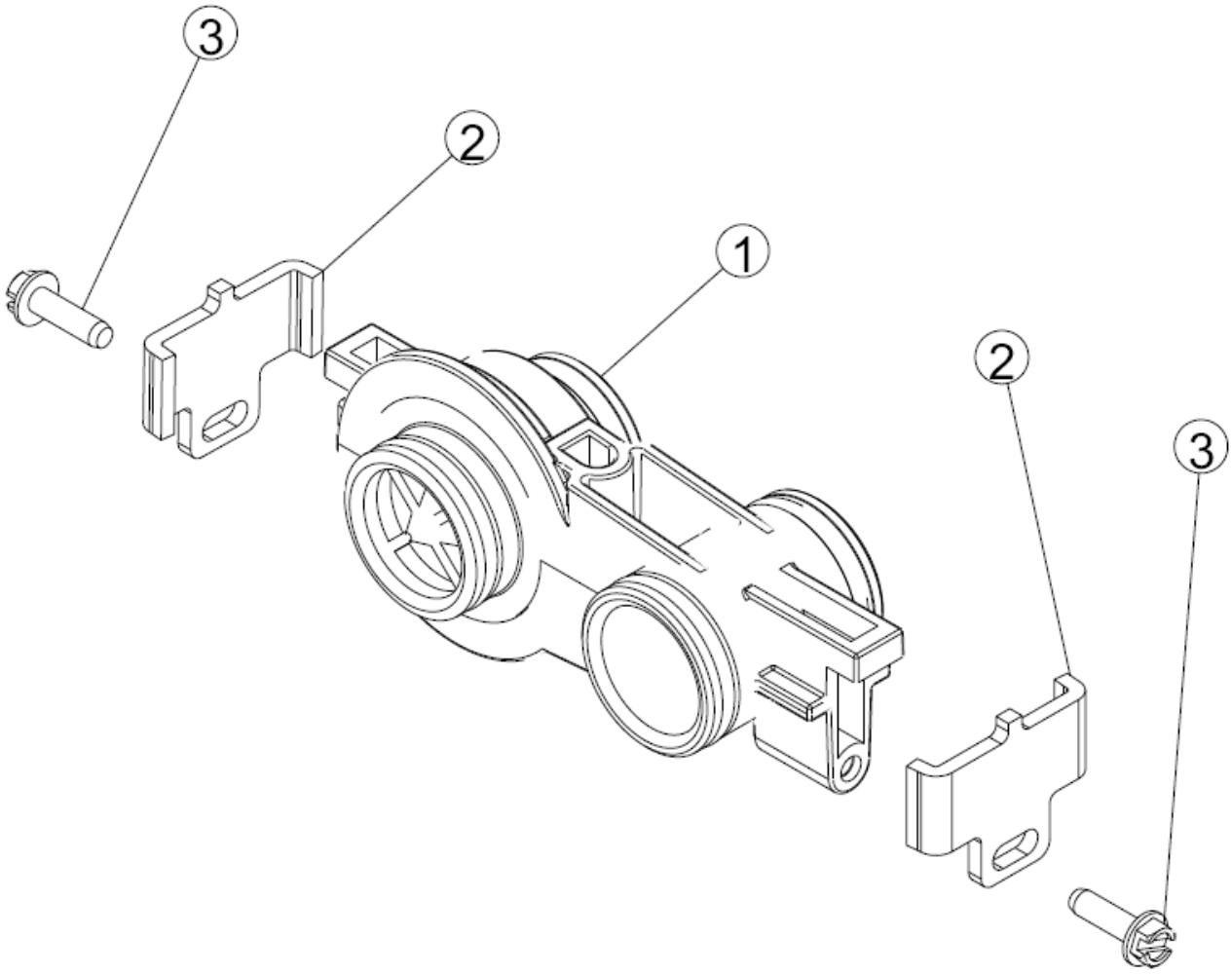


| ITEM | QTY | PART No | DESCRIPTION |
|---|---|---|---|
| 1 | 1 | 19797 | METER BODY ASSY ¾" TURBINE |
| 2 | 2 | 19569 | CLIP, FLOW METER |
| 3 | 2 | 13314 | SCREW HEX WASHER HEAD 8 - 18 x .60 |

# 9 Fault finding

| PROBLEM | CAUSE | REMEDY |
|---|---|---|
| 1. Softener fails to regenerate. | A. Electrical service to unit has been interrupted.<br>B. Timer is defective.<br>C. Motor is defective.<br>D. Water meter cable disconnected<br>E. Defective water meter | A. Assure permanent electrical supply (check fuse, plug, pull, chain or switch).<br>B. Replace timer.<br>C. Replace Motor.<br>D. Reconnect the meter cable<br>E. Replace the water meter |
| 2. Hard Water | A. By-pass open<br>B. Nosalt in brine tank<br>C. Injector screen blocked<br>D. Insufficient water in the brine tank<br>E. Hot water tank hardness<br>F. Leak at distributor tube<br>G. Internal valve leak<br>H. Water meter blocked<br>I. Water meter cable disconnected | A. Close the By-pass<br>B. Add Salt to brine tank and maintain salt level above water level.<br>C. Clean injector screen.<br>D. Check brine tank fill time and clean brine line flow control if plugged<br>E. Repeated flushing of the hot water tank is required.<br>F. Make sure distributor tube is not cracked. Check O-Ring and tube pilot.<br>G. Replace seals and spacers and/or piston.<br>A. Clean or Replace the water meter<br>B. Reconnect the meter cable |
| 3. Unit used too much salt. | A. Improper salt setting.<br>B. Excessive water in brine tank. | A. Check salt usage and salt setting.<br>B. See Problem n°6 |
| 4. Loss of water pressure. | A. Iron buildup in line to water softener.<br>B. Iron buildup in water conditioner.<br>C. Clogged resin<br>D. Inlet of control plugged due to foreign material broken loose from pipe by recent work done on plumbing system. | A. Clean line to water softener<br>B. Clean control valve and add mineral cleaner to resin bed. Increase frequency of regeneration and/or backwash time.<br>C. Contact your retailer<br>D. Remove pistons and clean control. |
| 5. Iron in softened water. | A. Fouled resin bed.<br>B. The iron level excedes the recomended parameters | A. Check backwash, brine draw and brine tank fill. Increase frequency of regeneration.<br>B. Contact your retailer |
| 6. Excessive water in brine tank. | A. Plugged drain line flow control.<br>B. Plugged injector system<br>C. Foreign material in brine valve.<br>D. Power loss during brine fill.<br>E. Foreign material in BLFC. | A. Check flow control.<br>B. Clean injector and screen.<br>C. Replace brine valve seat and clean valve.<br>D. Check power source.<br>E. Clean brine line flow control. |
| 7. The valve does not regenerate | A. The valve controller does not function correctly.<br>B. Microswitch defective<br>A. Defective Cam | A. Change the controller<br>B. Change the microswitch<br>C. Change the cam |

# 9 Fault finding

| PROBLEM | CAUSE | REMEDY |
|---|---|---|
| 8. Softener fails to draw brine. | Drain line flow control is plugged.<br>B. Injector is plugged.<br>C. Injector screen plugged.<br>D. Line pressure is too low.<br>E. Internal Control Leak | A. Clean drain line flow control<br>B. Clean injector<br>C. Clean screen.<br>D. Increase line pressure to 25 psi min<br>E. Change seals, spacers and piston assembly. |
| 9. Drain flows continuously. | A. Valve is not programming correctly.<br>B. Foreign material in control valve.<br>C. Internal control leak.<br>D. Valve stopped in regeneration | A. Check timer program and positioning of control. Replace power head assembly if not positioning properly<br>B. Remove power head assembly and inspect bore, remove foreign material and check control in various regeneration positions<br>C. Replace seals and piston assembly.<br>D. Change the motor |
| 10. Control cycles continuously. | A. Defective Microswitch<br>B. The valve controller does not function correctly. | A. Replace microswitch<br>B. Change the controller |
| 11. Loss of capacity | A. Increase in water hardness<br>B. Concentration or quantity of salt insuffiscient<br>C. Clogged resin<br>D. Bad distribution, preferential flow (irregular surface of the bed)<br>E. Valve internal leak<br>F. Resin loss | A. Change the capacity of the softener<br>B. Break up any salt concretions. Make sure that there is sufficient water level in tank<br>C. Contact your retailer<br>D. To check the distributors and the bacwash flow<br>E. To change the seals and spacers and/or the piston assembly<br>F. Check that the height of the resin bed is correct, Check the distributor tube is not broken.. Air pocket in the resin bed caused by damaged brine tube. |
| 12. Salty Water | A. Filter and injector blocked<br>B. The controller does not carry out the cycles correctly<br>C. Foreign body in the valve with brine<br>D. Line pressure is too low. | A. Clean the injector and filter<br>B. Check and replace if necessary.<br>C. check and clean, change if necessary<br>D. Increase line pressure to 25 psi min |

If you note one of the problems quoted above, please contact your retailer.

# 10 Appendix A

## *Capacity setting at various hardness figures*

| ppm as $CaCo^3$ | ºF | ºClark | ºDh | Litres softened Water |
|---|---|---|---|---|
| 150 | 15 | 10.5 | 8.4 | 2000 |
| 160 | 16 | 11.2 | 9.0 | 1875 |
| 170 | 17 | 11.9 | 9.5 | 1765 |
| 180 | 18 | 12.6 | 10.1 | 1667 |
| 190 | 19 | 13.3 | 10.6 | 1579 |
| 200 | 20 | 14.0 | 11.2 | 1500 |
| 210 | 21 | 14.7 | 11.8 | 1429 |
| 220 | 22 | 15.4 | 12.3 | 1364 |
| 230 | 23 | 16.1 | 12.9 | 1304 |
| 240 | 24 | 16.8 | 13.4 | 1250 |
| 250 | 25 | 17.5 | 14.0 | 1200 |
| 260 | 26 | 18.2 | 14.6 | 1154 |
| 270 | 27 | 18.9 | 15.1 | 1111 |
| 280 | 28 | 19.6 | 15.7 | 1071 |
| 290 | 29 | 20.3 | 16.2 | 1034 |
| 300 | 30 | 21.0 | 16.8 | 1000 |
| 310 | 31 | 21.7 | 17.4 | 968 |
| 320 | 32 | 22.4 | 17.9 | 938 |
| 330 | 33 | 23.1 | 18.5 | 909 |
| 340 | 34 | 23.8 | 19.0 | 882 |
| 350 | 35 | 24.5 | 19.0 | 857 |